AD628 M Case Fuse | 32 V DC | 15 A - 40 A

Andufuse · Dongguan Andu Electronics Co., Ltd. · andufuse.com/en/productshow.php?id=245

Key specifications

Parameter	Value
Product type	M case (mini) plug-in type automotive fuse
Part series	AD628 — AD628-15 to AD628-40
Rated voltage	32 V DC
Current range	15 A, 20 A, 25 A, 30 A, 40 A
Breaking capacity	1,000 A
Operating temperature	−40 °C to +125 °C
Insertion force	44.1 N maximum
Extraction force	4 N to 24.5 N
Overall height	15.0 mm
Cap footprint	10.7 × 7.7 mm
Executed standard	JASO D612-4
Standard packaging	4,000 pieces

Notes

- The five ratings share one body, one blade pattern and one 32 V DC rating; only the element and the housing colour change between part numbers.
- Voltage drop, cold resistance and I²t are measured per production part number. They are quoted on request with the offer rather than published as a fixed table.
- Curves on page 3 are typical values, not guaranteed limits. Use the melting-time table above for circuit-protection calculations.

Product description

The AD628 is an M case (mini) plug-in type automotive fuse. The fuse plugs into a holder cavity on its own two blades and a colour-coded plastic housing encloses the element. The series covers 15 A to 40 A at 32 V DC with a 1,000 A breaking capacity, a 15.0 mm overall height, a 10.7 × 7.7 mm cap footprint, an operating range of −40 °C to +125 °C and an insertion force of 44.1 N maximum, and is produced to JASO D612-4.

Part numbers, ratings and housing colours

Part no.	Current rating	Voltage rating	Housing colour
AD628-15	15 A	32 V DC	Grey
AD628-20	20 A	32 V DC	Blue
AD628-25	25 A	32 V DC	White
AD628-30	30 A	32 V DC	Pink
AD628-40	40 A	32 V DC	Green

Time-current (melting) characteristics

% of rating	Min. opening time	Max. opening time
110 %	360,000 s	No opening
135 %	60 s	1,800 s
200 %	5 s	60 s
350 %	0.2 s	7 s
600 %	0.040 s	1 s

Typical applications

- Compact fuse blocks and add-on holders
- Body control, lighting and auxiliary circuits
- 24 V and 32 V DC battery-fed branches
- Service and aftermarket stock in mini format

AD628 M Case Fuse | 32 V DC | 15 A - 40 A

Andufuse · Dongguan Andu Electronics Co., Ltd. · andufuse.com/en/productshow.php?id=245

Outline dimensions (mm)

Dimension	Value
Overall height, cap top to body bottom	15.0 mm
Body height below the cap flange	12.5 mm
Cap flange width (top view)	10.7 mm
Cap flange depth (top view)	7.7 mm
Body width (front view)	9.7 mm
Body depth (side view)	6.2 mm

All six values are taken from the drawing at right; none is converted from another format.

The cap flange, not the body, sets the minimum opening of the holder cavity. Allow for the holder tolerance before release.

Marking on the part: 32 V DC and the current rating, moulded into the top cap (see top view).

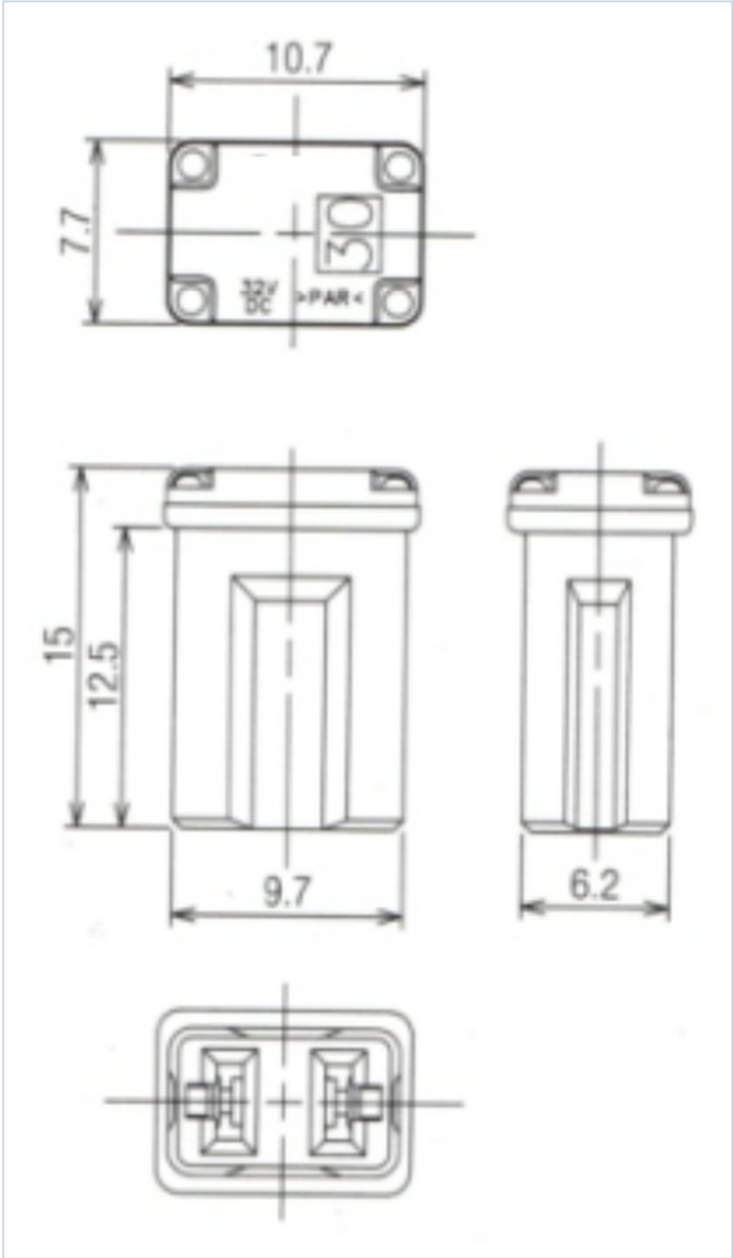

AD628 outline drawing — top, front, side and bottom view (mm)

Fitting notes

Seats in a JASO D612-4 mini case holder cavity; the cap flange overhangs the body by 0.5 mm on each side and by 0.75 mm at the front and back.

Insertion force is capped at 44.1 N, extraction force is held between 4 N and 24.5 N after one insertion cycle.

Supplied 4,000 pieces per inner box; private bag and carton marking available on request.

Time-current characteristic curves, 15 A to 50 A

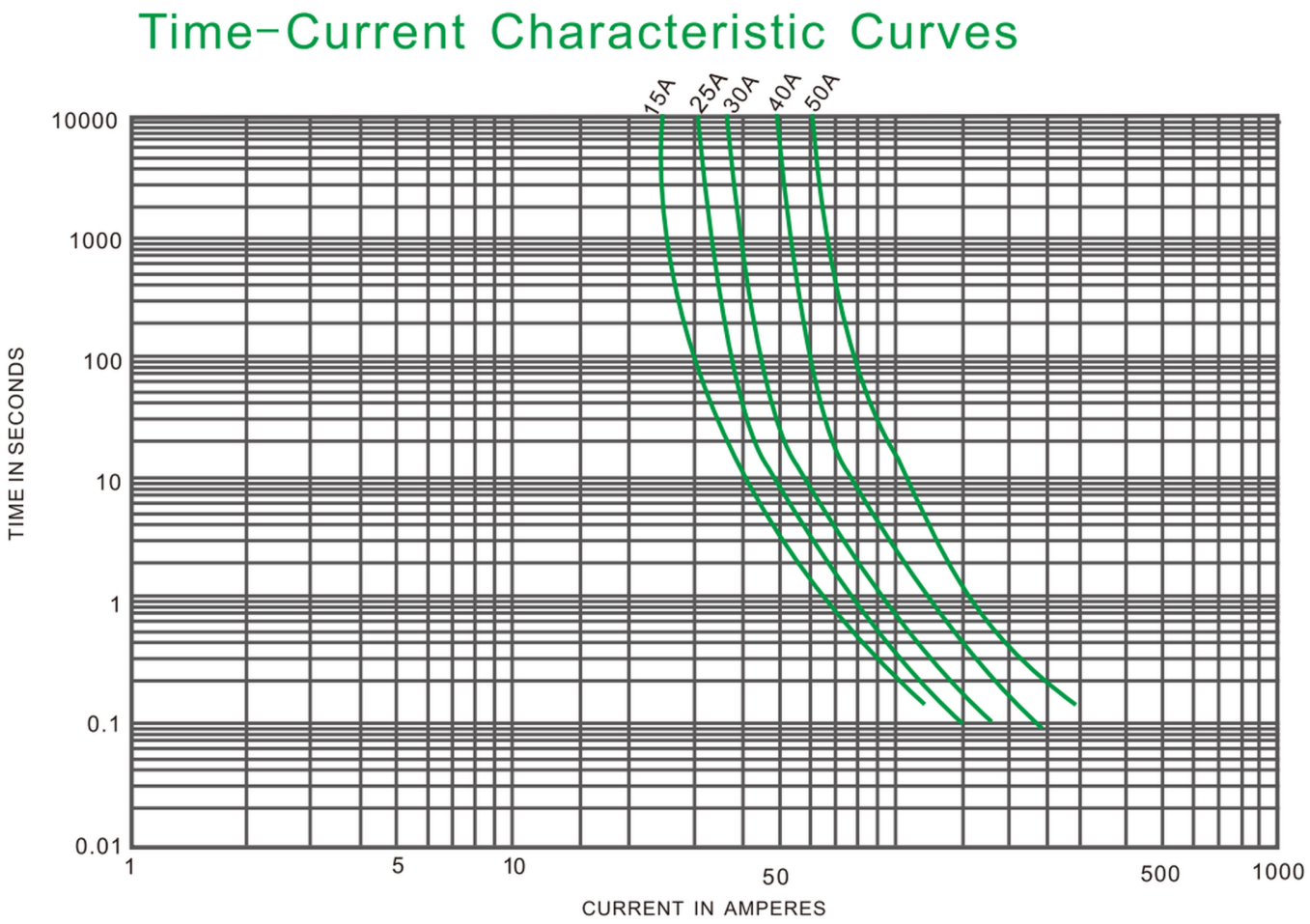

How to read this chart

Series traces

The series drawing carries five traces: 15 A, 25 A, 30 A, 40 A and 50 A. All five are printed in the same colour and are labelled at the top of the plot, so read the label rather than the colour.

The AD628 part numbers in this sheet run from 15 A to 40 A. If a circuit needs the 50 A step, confirm availability with Andufuse in writing.

Axes are logarithmic. Horizontal: current in amperes, 1 to 1,000 A. Vertical: time in seconds, 0.01 to 10,000 s.

Traces are typical values, not guaranteed limits. Where a trace and the melting-time table on page 1 disagree, the table governs.